HVEX
Driving innovation

PARTIAL DISCHARGE

HIGH-FREQUENCY CURRENT TRANSFORMER — HFCT

1.0 V/A · 1 kHz to 150 MHz · Clamp-on · 50 Ω BNC output

Reference standards
IEC 60270; IEC TS 62478 (partial discharge measurement)

150 MHz
UPPER BAND



www.hvex.com.br

High-Frequency Current Transformer — HFCT

Description

The HVEX HFCT is a high-frequency inductive sensor that detects the current pulses generated by partial discharges in transformers, cables, rotating machines, switchgear and other high-voltage equipment.

Clamp-on, it opens and closes with one hand and is installed without electrical contact on the grounding lead or return path of the equipment, with no outage or change to the installation.

Operating principle

By electromagnetic induction, the core around the conductor converts high-frequency current pulses into voltage, with 1.0 V/A sensitivity into 50 Ω. The 1 kHz to 150 MHz band follows fast, low-amplitude pulses, while power-frequency current is strongly attenuated.

The signal travels by coaxial cable to the acquisition system, which analyzes discharge amplitude, frequency, repetition rate and patterns to identify insulation defects.

Features

- 1.0 V/A ± 1% sensitivity into 50 Ω;
- 1 kHz to 150 MHz band (−3 dB);
- 2.5 ns usable rise time;
- Peak current up to 500 A and rms up to 5 A;
- Aperture for conductors up to 26.9 mm.

Installation points

- Bushing and tank grounding of transformers;
- Shield and grounding of cable terminations and joints;
- Neutral and grounding of rotating machines;
- Switchgear and cubicle grounding;
- Grounding of surge arresters and instrument transformers.

Benefits

- Non-invasive measurement, with the equipment in service;
- High sensitivity to fast, low-amplitude pulses;
- Natural rejection of low-frequency signals;
- Simple one-handed installation;
- Integration with HVEX PD measurement systems.

Applications

- PD testing and monitoring of transformers;
- Diagnostics of medium- and high-voltage cables;
- Rotating machines and generators;
- Switchgear, cubicles and substations;
- Continuous monitoring and measurement campaigns.

1.0 V/A	150 MHz	2.5 ns	26.9 mm
sensitivity	upper cutoff frequency	usable rise time	conductor aperture

High-Frequency Current Transformer — HFCT

Frequency response

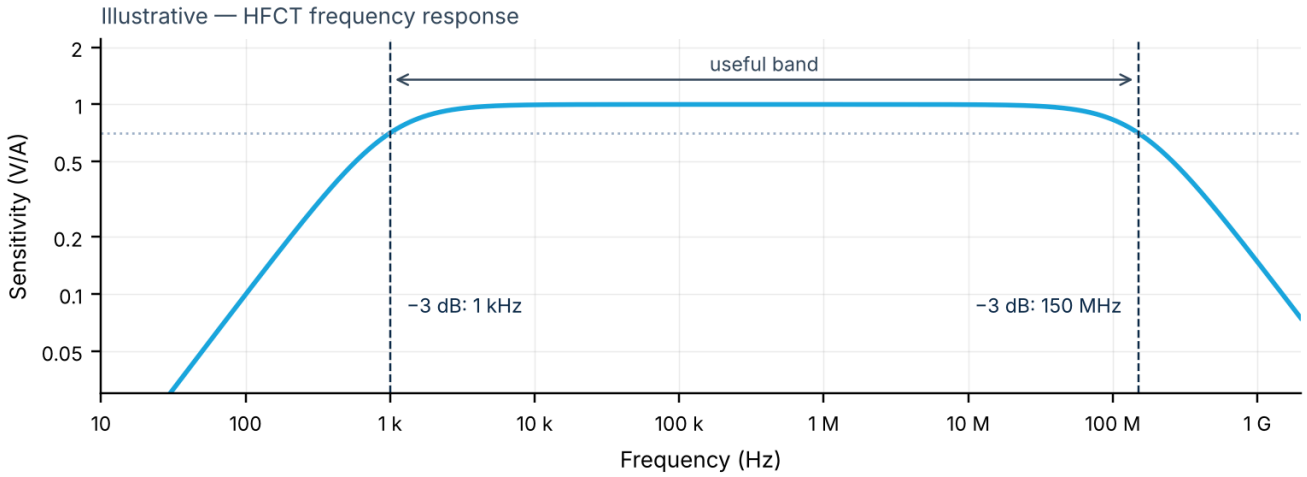

Typical response (illustration): flat 1.0 V/A sensitivity between the −3 dB points at 1 kHz and 150 MHz.

Measurement chain

1

Equipment under test

PD pulses flow through the grounding

2

HFCT

Clamps the conductor and converts current to voltage (1.0 V/A)

3

50 Ω coaxial cable

Carries the signal to the system input

4

Acquisition system

Analyzes PD amplitude, phase, repetition and patterns

Operating limits

Quantity	Value	Meaning
Maximum peak current	500 A	Largest pulse applied to the sensor
Maximum rms current	5 A	Continuous-duty limit
Current-time product	0.002 A·s	Saturation limit for long pulses
I/f figure	0.01 A rms/Hz	Allowable rms current at low frequency
Droop rate	0.7%/µs	Top decay of a rectangular pulse

High-Frequency Current Transformer — HFCT

Dimensions



Clamp-on HFCT with BNC output

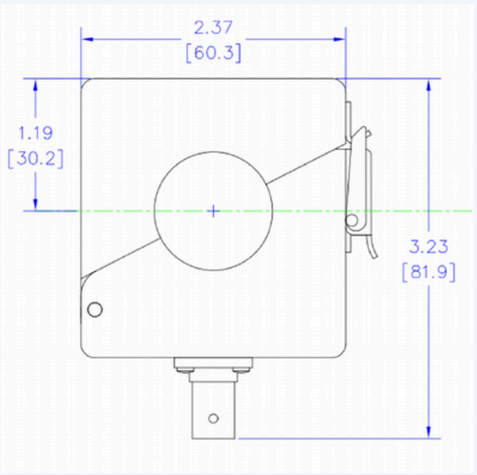

Front view — inches [mm]

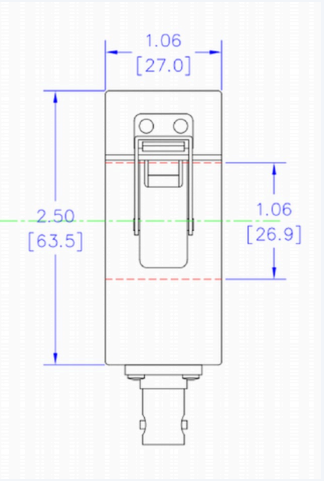

Side view — inches [mm]

Installation

- Open the clamp and close it around the grounding conductor;
- Connect the 50 Ω coaxial cable to the BNC output;
- Secure the cable to avoid loops and noise pickup;
- Keep safety clearances from energized parts.

Construction

- Housing with hinged latch;
- One-handed opening and closing;
- BNC output;
- 454 g weight;
- Operation from 0 to 65 °C.

High-Frequency Current Transformer — HFCT

Technical Specifications

Performance

Sensitivity	1.0 V/A ± 1% (into 50 Ω)
Output resistance	50 Ω
Low-frequency −3 dB point	1.0 kHz
High-frequency −3 dB point	150 MHz
Usable rise time	2.5 ns
Droop rate	0.7%/µs

Limits

Maximum peak current	500 A
Maximum rms current	5 A
Current-time product	0.002 A·s maximum
I/f figure	0.01 A rms/Hz

Mechanical

Mounting	Clamp-on with hinged latch, for one-handed installation
Output connector	BNC
Aperture	26.9 mm
Dimensions	60.3 × 63.5 × 27.0 mm (81.9 mm with connector)
Weight	454 g
Operating temperature	0 to 65 °C

Standards

Application reference	IEC 60270; IEC TS 62478

The standards listed identify the equipment's field of application and do not constitute certification of the test object. Weights and dimensions are approximate. Specifications subject to change without notice. Rev. 11/2026.

HVEX

Driving Innovation

+55 (35) 3622-2699

contato@hvex.com.br

www.hvex.com.br

R. Ismael Pinto de Noronha, 86 – Nossa Sra. de Fátima
Itajubá – MG, Brasil, 37502-508