HVEX
Driving innovation

EASYSCAN

ACOUSTIC CAMERA FOR PARTIAL DISCHARGE AND LEAK INSPECTION

136 MEMS microphones · 2 to 96 kHz · Corona and PD · Air and gas leaks · IP54

Reference standards
IEC TS 62478 (acoustic PD detection methods); IP54 degree of protection per IEC 60529

136
MEMS
MICROPHONES



www.hvex.com.br

EasyScan — Acoustic Camera for PD and Leaks

Description

The HVEX EasyScan is a portable acoustic imaging camera for locating partial discharges in high-voltage systems and compressed air and gas leaks in industrial plants. Its 136 low-noise MEMS microphones build a sound map that is overlaid on the digital camera image and shown in real time on the 4.3" touchscreen.

Inspection is done from a distance, 0.3 to 150 m, with the equipment energized and without contact.

Operating principle

The microphone array picks up the ultrasound emitted by the discharge or leak, and signal processing computes the direction of the source. The result appears as a colored spot on the image, in one of 8 palettes, with digital zoom up to 16×.

In PD mode, the camera detects corona, surface, floating and particle discharges. In leak mode, it estimates the leak rate, level and cost. Images and videos are saved to the SD card for analysis in the software and reporting.

Features

- 136 low-noise MEMS microphones with adjustable bandwidth from 2 to 96 kHz;
- Detection range from 0.3 to 150 m at 25 frames per second;
- 4.3" touchscreen (800 × 480) with the acoustic image overlaid;
- 8 color palettes (Ironbow, Rainbow, Fusion and others) and 1 to 16× digital zoom;
- Removable lithium-ion battery with about 2 h of operation; IP54; 1.2 kg.

Inspection modes

- Partial discharges: corona, surface, floating and particle;
- Compressed air leaks, with rate, level and cost estimate;
- Gas leaks in lines and fittings;
- Image and video recording on SD card;
- Analysis and reporting in the software.

Benefits

- Inspection from a distance, with the asset energized and no contact;
- Immediate visual location of the source on the camera image;
- One instrument for PD in the substation and leaks in the plant;
- Light and portable: 1.2 kg, with a pistol grip;
- Records ready for predictive maintenance.

Applications

- Substations: insulators, bushings, surge arresters, connections and busbars;
- Overhead lines and distribution networks;
- Medium-voltage panels, switchgear and electrical rooms;
- Compressed air and industrial gas networks;
- Predictive maintenance routes and energy audits.

136	2–96 kHz	150 m	1.2 kg
MEMS microphones	adjustable bandwidth	maximum detection range	IP54 · removable battery

EasyScan — Acoustic Camera for PD and Leaks

Equipment and dimensions



Front (136-microphone array) and back (4.3" display).

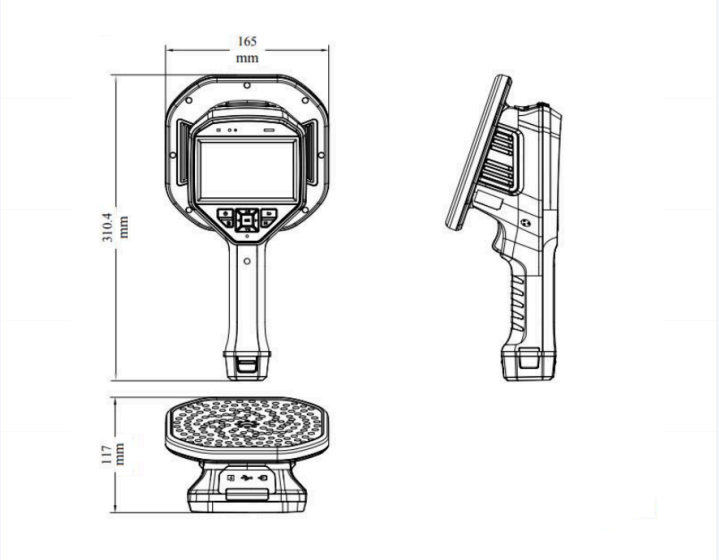

Dimensions: 165 × 310.4 × 117 mm.

Inspection modes

Mode	What it detects	Result
Partial discharges	Corona, surface, floating and particle discharges in HV systems	Acoustic map on the image and discharge type
Compressed air leak	Leaks in pipes, fittings and valves	Estimated leak rate, level and cost
Gas leak	Leaks in industrial gas lines	Acoustic map and signal level
Recording	Inspection images and videos	Files on the SD card for the software

EasyScan — Acoustic Camera for PD and Leaks

Portable and ready for the inspection route



EasyScan in its rigid carrying case.

- Pistol grip with hand strap;
- 4.3" LCD touchscreen, 800 × 480;
- Acoustic image overlaid on the digital camera image;
- 25 frames per second and 1 to 16× digital zoom;
- Adjustable frequency band from 2 to 96 kHz;
- Removable SD card storage;
- Wi-Fi, Bluetooth, USB-C and HDMI (type D);
- Removable lithium-ion battery, ≈ 2 h of operation;
- IP54 degree of protection;
- Rigid carrying case.

Analysis software

- Analysis of captured images and videos;
- Generation and export of inspection reports.

In the substation

- Scanning of energized points from a safe distance;
- Fast inspection of insulators, bushings and connections;
- Discharge type identified to prioritize maintenance.

EasyScan — Acoustic Camera for PD and Leaks

Technical Specifications

Acoustics

Microphones	136 low-noise MEMS
Frequency band	2 to 96 kHz, adjustable
Detection range	0.3 to 150 m
Frame rate	25 fps
Digital zoom	1× to 16×
Palettes	8 (Ironbow, Rainbow, Fusion and others)

Detection modes

Partial discharges	Corona, surface, floating and particle
Leaks	Compressed air and gas, with rate, level and cost estimate

Display, data and interfaces

Display	4.3" LCD touchscreen, 800 × 480
Storage	Removable SD card
Interfaces	Wi-Fi, Bluetooth, USB-C and HDMI (type D)
Software	Image analysis and report export

Construction

Battery	Removable lithium-ion; ≈ 2 h of operation
Protection	IP54
Dimensions	165 × 310.4 × 117 mm (W × H × D)
Weight	1.2 kg

The standards listed identify the equipment's field of application and do not constitute certification of the test object. Weights and dimensions are approximate. Specifications subject to change without notice. Rev. 11/2026.

HVEX

Driving Innovation

+55 (35) 3622-2699

contato@hvex.com.br

www.hvex.com.br

R. Ismael Pinto de Noronha, 86 – Nossa Sra. de Fátima
Itajubá – MG, Brasil, 37502-508