HVEX
Driving innovation

PD PANEL

FIXED PARTIAL DISCHARGE MEASUREMENT AND MONITORING PANEL

Continuous monitoring · Apparent charge in pC · Condenser bushings · HFCT · Tan δ

Reference standards
IEC 60270, IEC 60060, IEEE C57.113, IEEE C57.124, IEEE 1434, IEEE 400 and ABNT NBR 5356

24/7
CONTINUOUS MONITORING



www.hvex.com.br

Fixed Partial Discharge Monitoring Panel

Description

The HVEX PD Panel is a fixed system for continuous measurement and monitoring of partial discharges (PD), permanently installed next to the asset. It combines an industrial computer, a high-speed digitizer and the HVEX PDMS software to configure, acquire and analyze PD pulses from transformers, bushings, cables, generators and other equipment rated 13.8 to 500 kV.

Discharges are quantified in picocoulombs (pC) according to IEC 60270, and results are sent to the control center over Ethernet, optical fiber or GSM.

Operating principle

The sensors pick up the high-frequency pulses produced by partial discharges. Couplers on the capacitive tap of condenser bushings and coupling capacitors act as capacitive dividers and high-pass filters (IEEE C57.113); where no tap is accessible, an HFCT on the grounding cable takes the reading.

The panel digitizes the signals at 500 MSa/s, applies digital filters to reject noise and computes the apparent charge per phase every 5 minutes, also recording voltage, leakage current and the change in bushing tan δ and capacitance.

Features

- Three-phase apparent charge measurement in pC, with maximum positive and negative PD per phase;
- 500 MSa/s, 12-bit digitization; digital filters from 10 kHz to 100 MHz;
- Three sensor types: capacitive tap coupler, HFCT and coupling capacitor;
- Tracking of bushing leakage current and of the change in tan δ and capacitance;
- IP54 stainless steel panel with surge protection and Modbus TCP and DNP3 communication.

Monitored quantities

- Partial discharges (pC) on phases A, B and C, per IEC 60270;
- RMS phase voltage and phase angle between phases;
- Bushing leakage current and count of positive and negative PD pulses;
- Percentage change in tan δ and capacitance;
- Pulses over the sine wave, Lissajous figure and FFT in the PDMS software.

Benefits

- Continuous monitoring: PD activity is tracked before it turns into a failure;
- Condition-based maintenance with fewer planned outages;
- Permanent installation: no need to take the asset out of service to measure;
- Traceable calibration with the HVEX PD calibrator, 5 to 1000 pC;
- Made in Brazil by HVEX, with technical support and training.

Applications

- Power transformers and reactors with condenser bushings;
- Hydrogenerators, motors and energized busbars;
- Surge arresters, CTs, VTs, disconnect switches and insulators;
- Cables, terminations, terminals and joints;
- Live-tank and dead-tank circuit breakers, capacitors and capacitor banks.

500 MSa/s	12 bits	13.8–500 kV	IP54
sampling rate	vertical resolution	monitored asset class	stainless steel panel

Fixed Partial Discharge Monitoring Panel

Sensors

The right sensor depends on the asset and on the available access point. All three types connect to the panel by coaxial cable.



PD coupler — installed on the capacitive tap of condenser bushings; IP65.



HFCT — high-frequency CT on the grounding cable, for assets without an accessible tap.

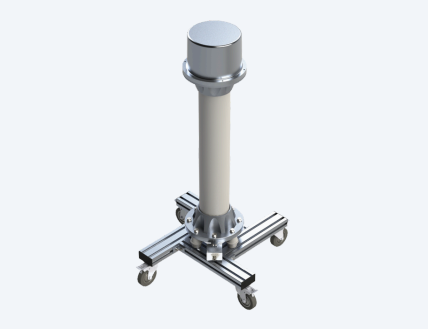

Coupling capacitor — 1000 pF capacitive divider connected to the HV terminal.

Which sensor for each asset

Asset	Sensor	Connection point
Transformers and reactors with condenser bushings	PD coupler	Bushing capacitive tap
CTs, VTs and wall bushings	PD coupler or HFCT	Capacitive tap or grounding cable
Surge arresters, disconnect switches, insulators and dead-tank breakers	HFCT	Grounding cable
Hydrogenerators, motors and energized busbars	Coupling capacitor	Asset HV terminal
Live-tank breakers, reactors and capacitors	Coupling capacitor	Asset HV terminal
Cables, terminations, terminals and joints	HFCT or capacitor (laboratory)	Accessible shield or HV terminal

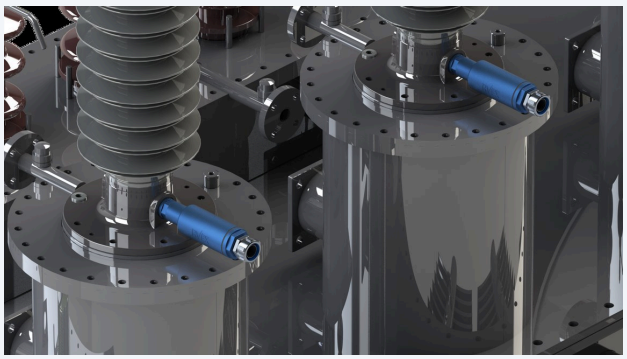

PD coupler installed on the transformer bushing tap.

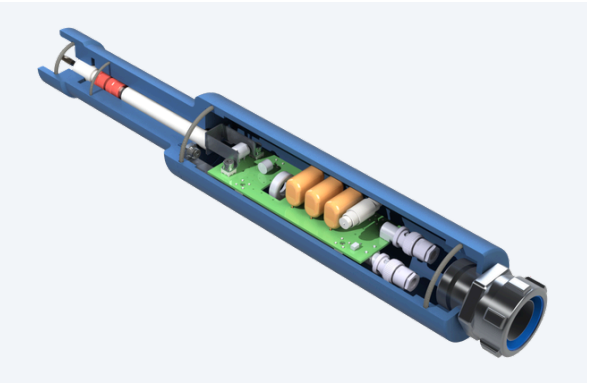

Cutaway view of the coupler: encapsulated capacitive divider and high-pass filter.

Fixed Partial Discharge Monitoring Panel

Monitoring panel



Inside the panel: acquisition unit (bottom) and data processing and communication unit (top).

- Industrial computer running the HVEX PDMS software;
- High-speed digitizer: 500 MSa/s and 12-bit vertical resolution;
- Dedicated sensor ports, by coaxial cable;
- High-pass, band-pass and low-pass digital filters, 10 kHz to 100 MHz;
- Automatic acquisition every 5 minutes, logged per phase;
- Modbus TCP/IP and DNP 3.0 over Ethernet, optical fiber or GSM;
- Surge protection: 20 kV (1.2/50 µs) and 40 kA (8/20 µs);
- IP54 stainless steel enclosure, 500 × 600 × 300 mm, 18 kg;
- IP65 PD coupler with bushing adapter;
- Portable PD calibrator to adjust the measurement at commissioning.

HVEX PDMS software

- Test control and logging of every acquisition;
- Digital filtering for noise rejection;
- Pulses over the sine wave, Lissajous figure and FFT;
- Database with the history of each asset;
- Reports in .pdf and .docx and data export for signal processing.

HVEX PD calibrator

- Bipolar pulses of 5, 10, 50, 100, 500 and 1000 pC;
- 100 Hz or 120 Hz repetition rate;
- Known, traceable value emulating a discharge, per IEC 60270;
- One instrument replaces 3 or 4 calibrators;
- Portable: 7.5 × 15 × 20 cm.

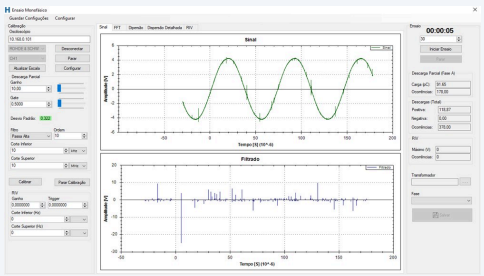

PDMS software screen: pulses over the sine wave and filtered signal.

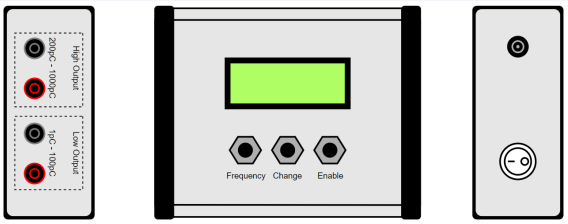

HVEX PD calibrator: front and side panels.

Fixed Partial Discharge Monitoring Panel

Technical Specifications

Measurement and acquisition

Detection method	Electrical, apparent charge per IEC 60270 (capacitive coupling), and high-frequency (HFCT)
Channels	Phases A, B and C
Sampling rate	500 MSa/s
Vertical resolution	12 bits
Bandwidth and filters	10 kHz to 100 MHz; high-pass, band-pass and low-pass digital filters
Display	Pulses over the sine wave (phase-resolved), Lissajous figure and FFT
Acquisition interval	Every 5 minutes
Asset voltage class	13.8 kV to 500 kV
Coupling capacitor	1000 pF; oil or epoxy insulation

Monitored quantities

Partial discharges	Maximum positive and negative PD per phase (A, B and C), in pC, per IEC 60270
Voltage	RMS value of phases A, B and C; phase angle A–B, B–C and C–A
Bushing leakage current	Value and count of positive and negative PD pulses
Tan δ and capacitance	Percentage change from the reference
Identification	Monitored equipment identified in every record

Communication and software

Protocols	Modbus TCP/IP and DNP 3.0
Interfaces	Ethernet, optical fiber and GSM; sensors by coaxial cable
Software and reports	HVEX PDMS; reports in .pdf and .docx; data export

Construction and environment

Panel	Stainless steel, IP54; 500 × 600 × 300 mm (W × H × D); 18 kg
PD coupler	IP65; 353 mm × Ø 62 mm (413 mm with bushing adapter)
Electrical protection	Impulse 20 kV (1.2/50 µs); surge 40 kA (8/20 µs); applied voltage 2.5 kV for 60 s
Environment	Temperature −25 to +85 °C; humidity 5 to 95 % non-condensing

Scope of supply

System	Monitoring panel; sensors for the asset (PD coupler, HFCT or coupling capacitor); coaxial cables; PDMS software
PD calibrator	5, 10, 50, 100, 500 and 1000 pC pulses; 100/120 Hz; 7.5 × 15 × 20 cm
Training	Staff training on system operation and results analysis

The standards listed identify the equipment's field of application and do not constitute certification of the test object. Weights and dimensions are approximate. Specifications subject to change without notice. Rev. 11/2026.

HVEX

Driving Innovation

+55 (35) 3622-2699

contato@hvex.com.br

www.hvex.com.br

R. Ismael Pinto de Noronha, 86 – Nossa Sra. de Fátima
Itajubá – MG, Brasil, 37502-508